Nominal Diameter	A (Max)	A (Min)	T	C +/- 1/64
0.438	0.440	0.435	0.060	0.469

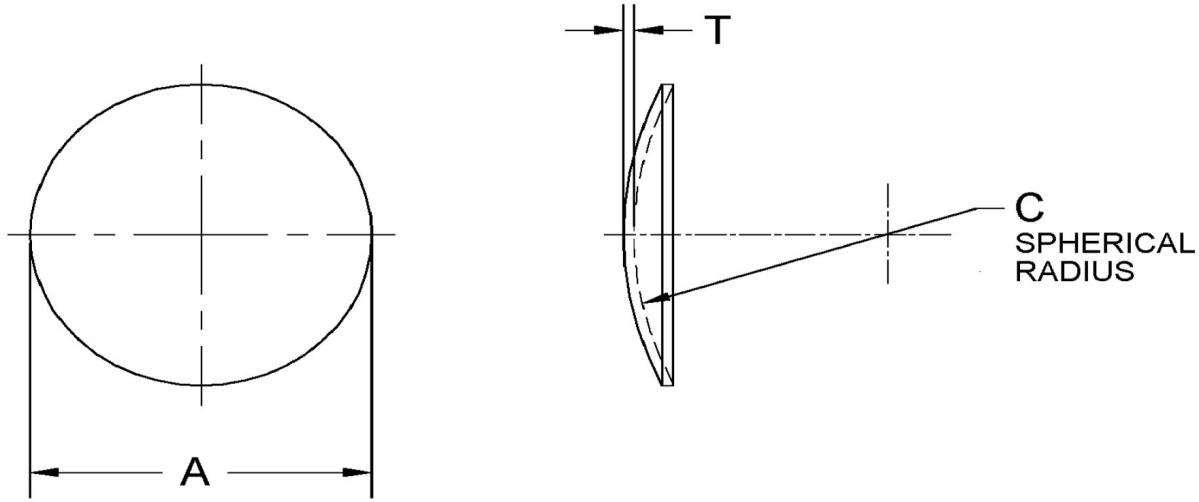

Dimensions in Inches

SEASTROM MANUFACTURING CO., INC.
456 SEASTROM STREET
TWIN FALLS, IDAHO 83301
(208) 737-4300 FAX (208) 734-7222

ALL INFORMATION
COPYRIGHTED BY
SEASTROM MFG. ©

PART NO.:	5790-8-C2
PART NAME:	Expansion Plugs Concave
MATERIAL:	Cold Rolled Steel
HEAT TREAT:	Please refer to Material & Finish Specifications in Engineering Resources
FINISH:	Cadmium Type II (All Dimensions Are Prior To Plating)