Nominal Diameter	A (Max)	A (Min)	T+/-.002	C +/- 1/64
0.187	0.189	0.185	0.012	0.203

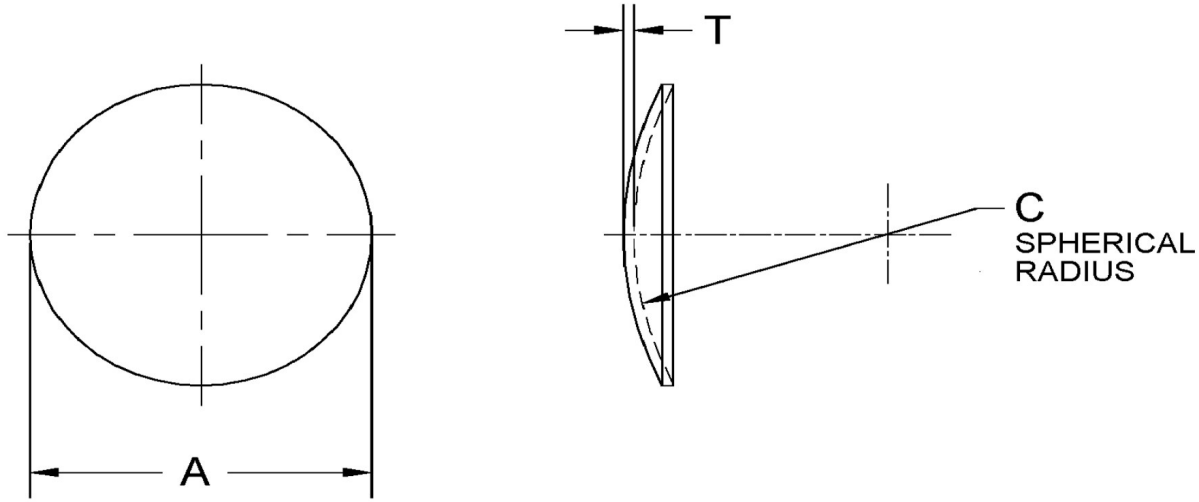

Dimensions in Inches

SEASTROM MANUFACTURING CO., INC.
456 SEASTROM STREET
TWIN FALLS, IDAHO 83301
(208) 737-4300 FAX (208) 734-7222

ALL INFORMATION
COPYRIGHTED BY
SEASTROM MFG. ©

PART NO.:	5790-27
PART NAME:	Expansion Plugs Concave
MATERIAL:	Stainless Steel 301-304
HEAT TREAT:	Please refer to Material & Finish Specifications in Engineering Resources
FINISH:	None