C+/-.005	D+/-.005	G+/-.01	K+/-.005	R+/-.01	Screw Size
0.834	1.293	0.246	0.722	0.750	5/8

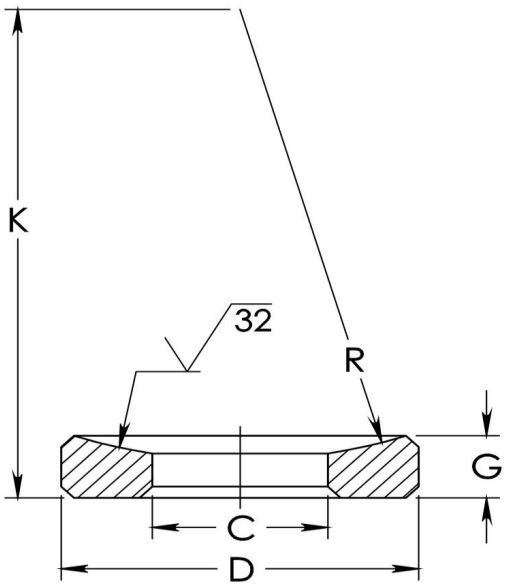

SEASTROM MANUFACTURING CO., INC.
456 SEASTROM STREET
TWIN FALLS, IDAHO 83301
(208) 737-4300 FAX (208) 734-7222

ALL INFORMATION
COPYRIGHTED BY
SEASTROM MFG. ©

PART NO.:	5785-7-625
PART NAME:	Washers, Concave
MATERIAL:	Cold Rolled Steel
HEAT TREAT:	Please refer to Material & Finish Specifications in Engineering Resources
FINISH:	Case Hardened(550+100)HV10 (All Dimensions Are Prior To Plating)

Dimensions in Inches