A+/-.01	B+/-.01	C+/-.01	D Ref	T+/-.003	Screw Size
0.200	0.507	0.087	0.339	0.025	10

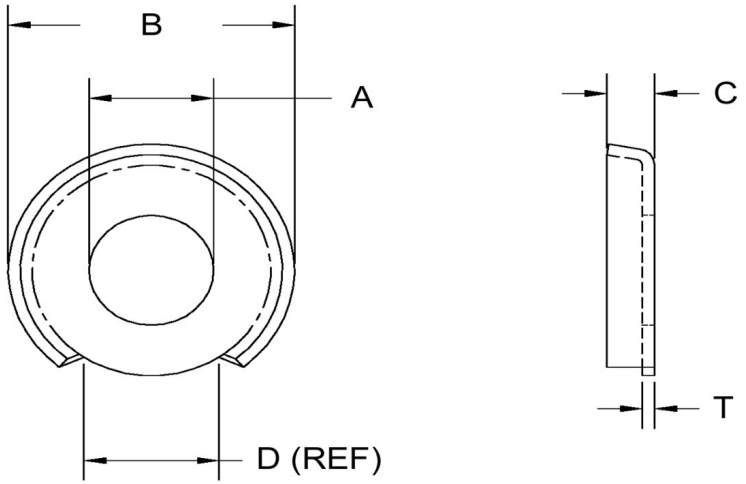

SEASTROM MANUFACTURING CO., INC.
456 SEASTROM STREET
TWIN FALLS, IDAHO 83301
(208) 737-4300 FAX (208) 734-7222

ALL INFORMATION
COPYRIGHTED BY
SEASTROM MFG. ©

PART NO.:	5737-4
PART NAME:	Washers, Terminal Cup
MATERIAL:	Brass
HEAT TREAT:	Please refer to Material & Finish Specifications in Engineering Resources
FINISH:	None

Dimensions in Inches