B+/-.106	D+/-.005	L+/-.01	W+/-.01	H+/-.016	T+/-.002	Wire Size	Screw Size
0.062	0.175	0.593	0.312	0.175	0.021	14-16	8

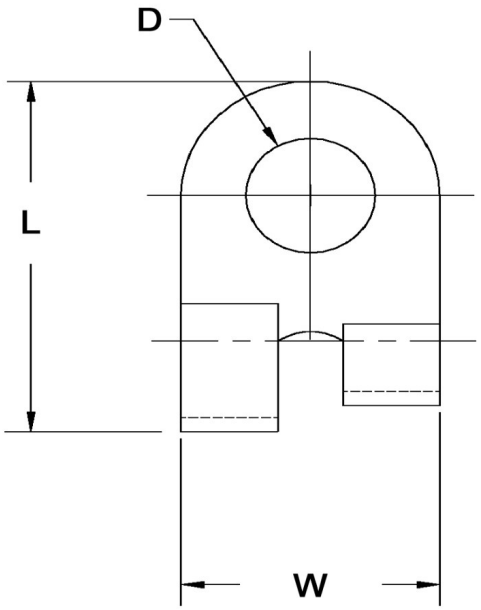

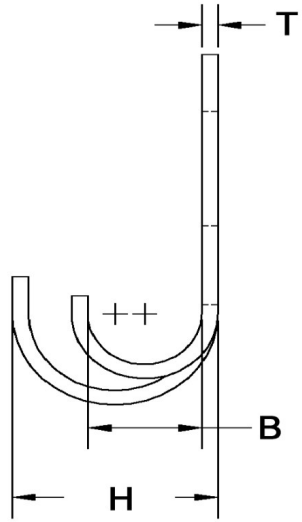

Dimensions in Inches

SEASTROM MANUFACTURING CO., INC.
456 SEASTROM STREET
TWIN FALLS, IDAHO 83301
(208) 737-4300 FAX (208) 734-7222

ALL INFORMATION
COPYRIGHTED BY
SEASTROM MFG. ©

PART NO.:	5460-1C
PART NAME:	Solder Lugs 2
MATERIAL:	Copper
HEAT TREAT:	Please refer to Material & Finish Specifications in Engineering Resources
FINISH:	Bright Tin (All Dimensions Are Prior To Plating)