| B+/-.106 | D+/-.005 | L+/-.01 | W+/-.01 | H+/-.016 | T+/-.003 | Wire Size | Screw Size |
|---|---|---|---|---|---|---|---|
| 0.062 | 0.175 | 0.593 | 0.312 | 0.175 | 0.020 | 14-16 | 8 |

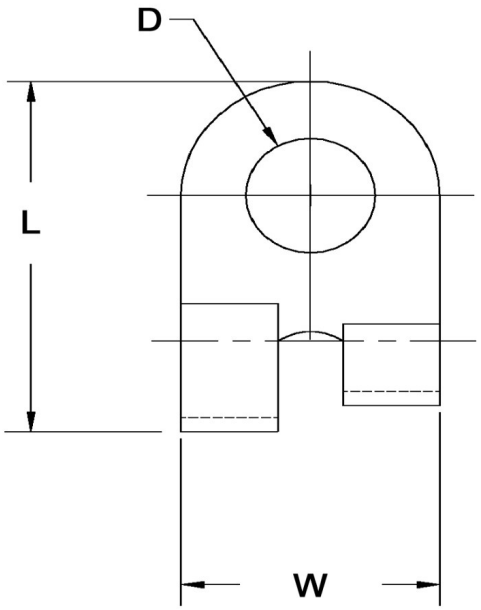


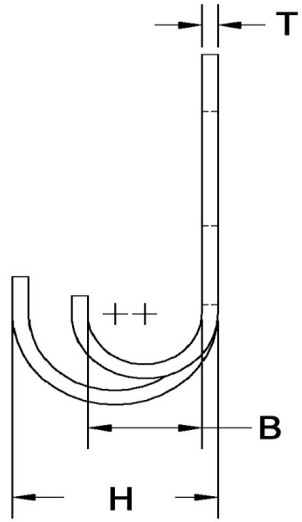


Dimensions in Inches

SEASTROM MANUFACTURING CO., INC.
456 SEASTROM STREET
TWIN FALLS, IDAHO 83301
(208) 737-4300 FAX (208) 734-7222

ALL INFORMATION
COPYRIGHTED BY
SEASTROM MFG. ©

| | |
|---|---|
| **PART NO.:** | 5460-1B |
| **PART NAME:** | Solder Lugs 2 |
| **MATERIAL:** | Brass |
| **HEAT TREAT:** | Please refer to Material & Finish Specifications in Engineering Resources |
| **FINISH:** | Bright Tin (All Dimensions Are Prior To Plating) |