D1+/-.01	D2+/-.005	S+/-.015	N+/-.015	T+/-.0035	Screw Size
0.750	0.147	0.080	0.433	0.032	6

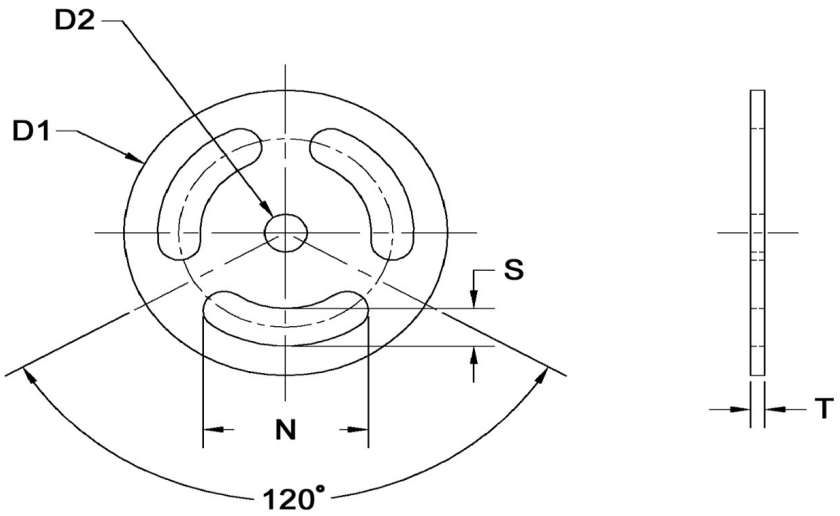

SEASTROM MANUFACTURING CO., INC.
456 SEASTROM STREET
TWIN FALLS, IDAHO 83301
(208) 737-4300 FAX (208) 734-7222

ALL INFORMATION
COPYRIGHTED BY
SEASTROM MFG. ©

PART NO.:	5440-1
PART NAME:	Solder Lugs 1
MATERIAL:	Brass
HEAT TREAT:	Please refer to Material & Finish Specifications in Engineering Resources
FINISH:	Bright Tin (All Dimensions Are Prior To Plating)

Dimensions in Inches