D+/-.015	W+/-.01	T+/-.004	A+/-.03	E+/-.005	F+/-.06
1	0.375	0.030	0.750	0.201	0.125

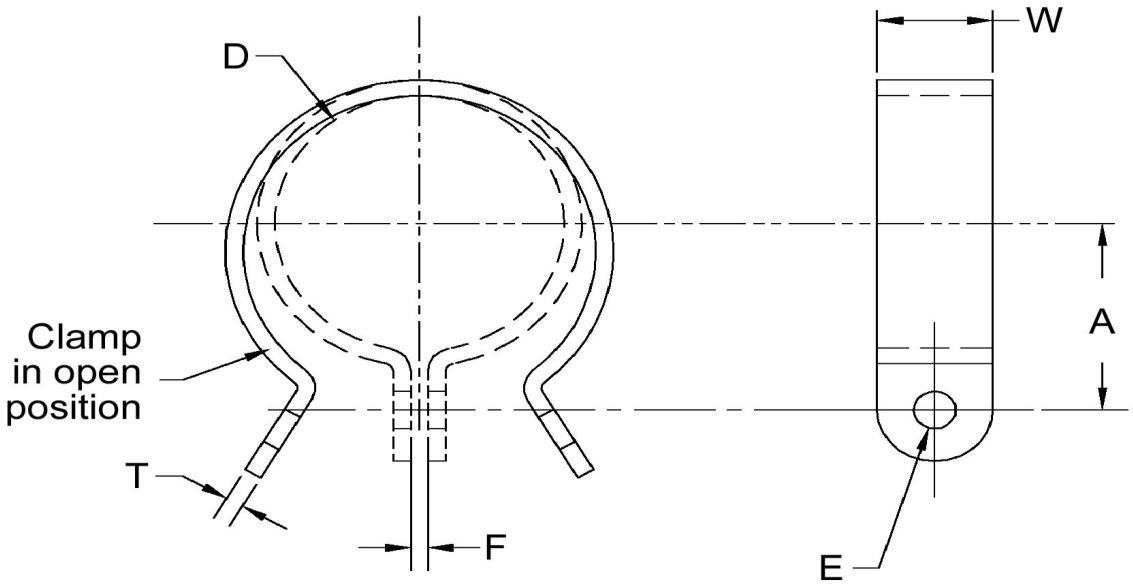

NOTE:

CLAMPS ARE SUPPLIED IN THE OPEN POSITION. ALL DIMENSIONS TO BE MEASURED WITH DUMMY COMPONENT IN PLACE AND CLAMP CLOSED.

Dimensions in Inches

SEASTROM®

SEASTROM MANUFACTURING CO., INC.
456 SEASTROM STREET
TWIN FALLS, IDAHO 83301
(208) 737-4300 FAX (208) 734-7222

ALL INFORMATION
COPYRIGHTED BY
SEASTROM MFG. ©

PART NO.:	5315-100-3
PART NAME:	Clamps, Tube
MATERIAL:	Stainless Steel
HEAT TREAT:	Please refer to Material & Finish Specifications in Engineering Resources
FINISH:	None