A (Rad)+/-.01	B1+/-.005	B2+/-.005	C	D+/-.01	E+/-.02	F+/-.01	G+/-.016	T+/-.003
0.062	0.150	0.230	1.063	0.290	0.125	0.250	0.250	0.030

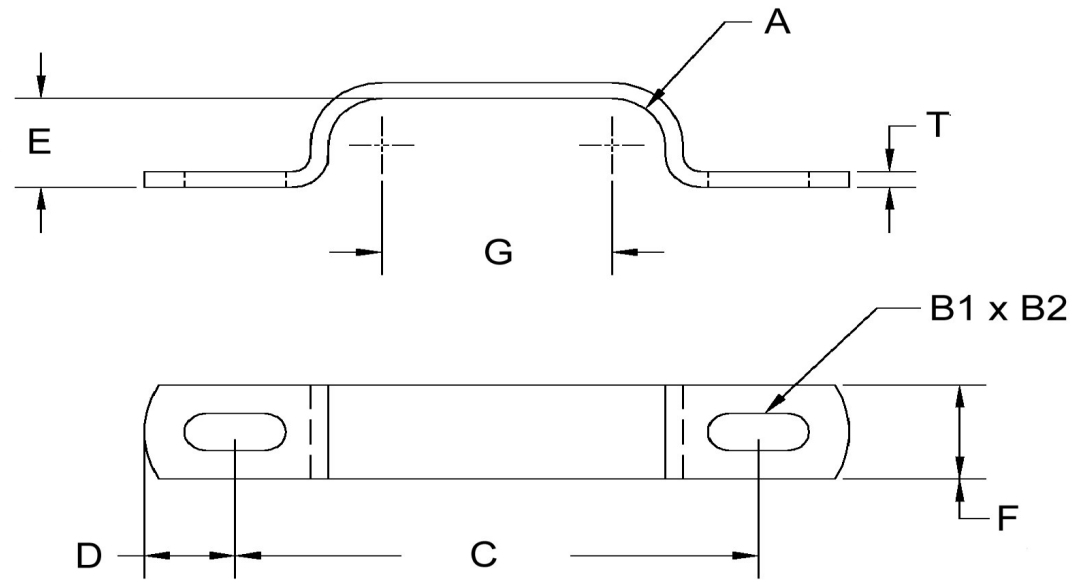

SEASTROM MANUFACTURING CO., INC.
456 SEASTROM STREET
TWIN FALLS, IDAHO 83301
(208) 737-4300 FAX (208) 734-7222

ALL INFORMATION
COPYRIGHTED BY
SEASTROM MFG. ©

PART NO.:	5310-2-N
PART NAME:	Clamps, Retaining
MATERIAL:	Cold Rolled Steel
HEAT TREAT:	Please refer to Material & Finish Specifications in Engineering Resources
FINISH:	Nickel (All Dimensions Are Prior To Plating)

Dimensions in Inches