A+/-.01	C+/-.005	D+/-.005	G+/-.003	H+/-.003	T+/-.0003	Case Style
0.625	0.100	0.500	0.080	0.031	0.003	To 5

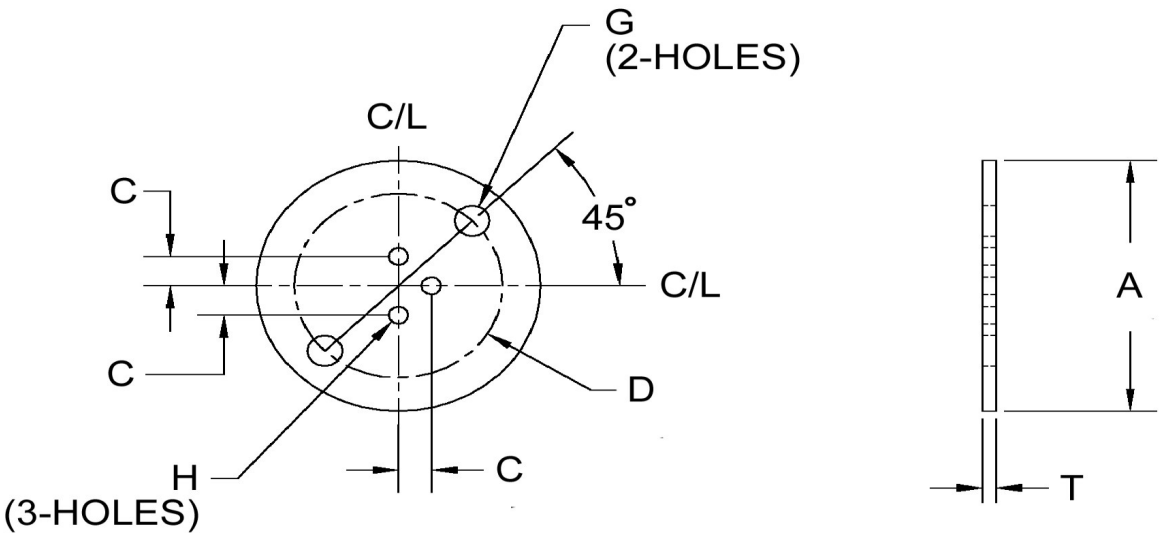

SEASTROM MANUFACTURING CO., INC.
456 SEASTROM STREET
TWIN FALLS, IDAHO 83301
(208) 737-4300 FAX (208) 734-7222

ALL INFORMATION COPYRIGHTED BY SEASTROM MFG. ©

PART NO.:	5214-3
PART NAME:	Insulators, Solid State
MATERIAL:	Kapton
HEAT TREAT:	Please refer to Material & Finish Specifications in Engineering Resources
FINISH:	None

Dimensions in Inches