D+/-.015	L1+/-.01	L2+/-.01	T (Stk)	H (Max)	W (Base Max)	X+/-.03	E+/-.005	A+/-.01	R (Max)
0.230	0.375	0.437	0.016	0.485	0.470	0.300	0.100	0.218	0.125

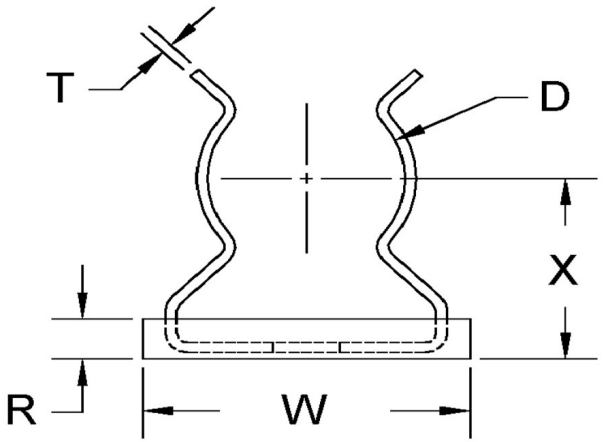

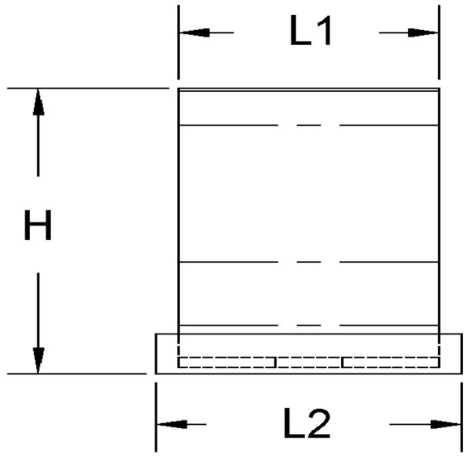

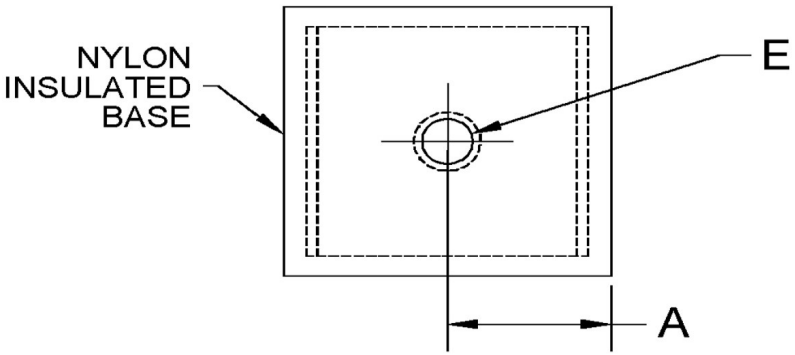

ALL DIMENSIONS ARE TO BE MEASURED WITH THE SPRING CLIP SECURED TO A FLAT SURFACE AND A COMPONENT OF THE NOMINAL DIAMETER IN PLACE.

SEASTROM MANUFACTURING CO., INC.
456 SEASTROM STREET
TWIN FALLS, IDAHO 83301
(208) 737-4300 FAX (208) 734-7222

ALL INFORMATION COPYRIGHTED BY SEASTROM MFG. ©

PART NO.:	4512-23-43-1-S
PART NAME:	Spring Clips 29
MATERIAL:	Beryllium Copper
HEAT TREAT:	Please refer to Material & Finish Specifications in Engineering Resources
FINISH:	Silver (All Dimensions Are Prior To Plating)

Dimensions in Inches