L+/-.01	B+/-.01	T+/-.0024	Screw Size	Screw Type
0.875	0.562	0.048	12-11	A

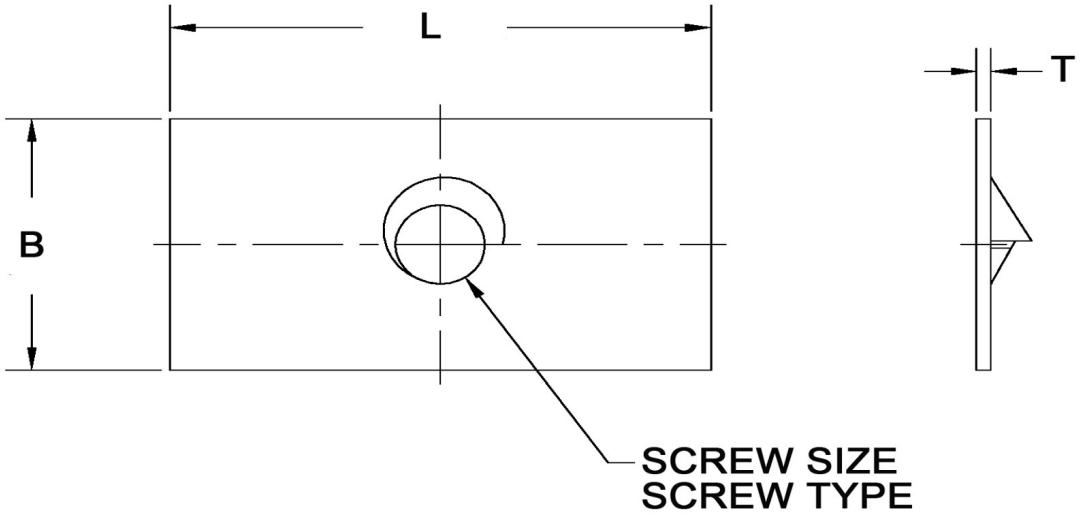

SEASTROM MANUFACTURING CO., INC.
456 SEASTROM STREET
TWIN FALLS, IDAHO 83301
(208) 737-4300 FAX (208) 734-7222

ALL INFORMATION
COPYRIGHTED BY
SEASTROM MFG. ©

PART NO.:	2720-4
PART NAME:	Nuts, Formed
MATERIAL:	Cold Rolled Steel
HEAT TREAT:	Please refer to Material & Finish Specifications in Engineering Resources
FINISH:	None

Dimensions in Inches