Design Hole Size+/-.002	A+/-.005	B+/-.01	T+/-.001	# Of Tabs
0.300	0.313	0.159	0.010	6

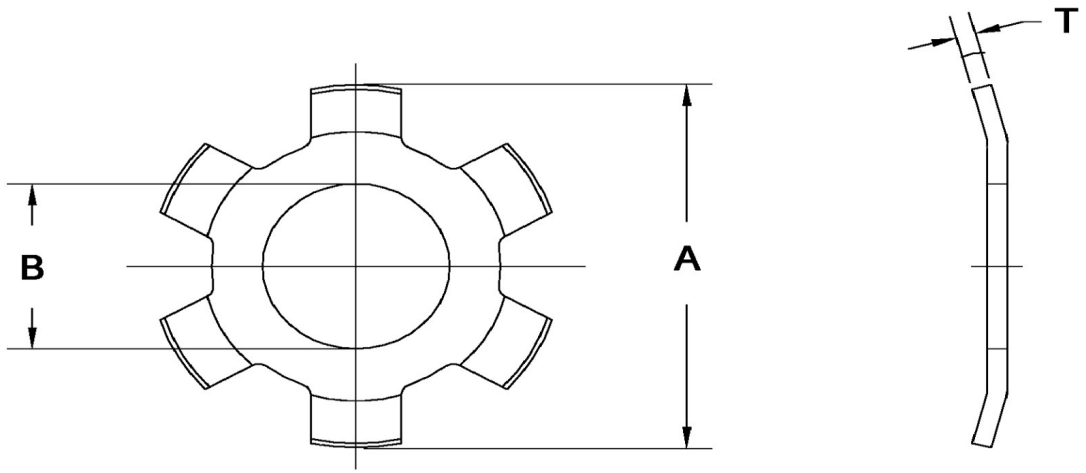

Dimensions in Inches

SEASTROM MANUFACTURING CO., INC.
456 SEASTROM STREET
TWIN FALLS, IDAHO 83301
(208) 737-4300 FAX (208) 734-7222

ALL INFORMATION
COPYRIGHTED BY
SEASTROM MFG. ©

PART NO.:	2715-6
PART NAME:	Washers, Retention, External
MATERIAL:	Spring Steel
HEAT TREAT:	Please refer to Material & Finish Specifications in Engineering Resources
FINISH:	Zinc Type III or V (All Dimensions Are Prior To Plating)