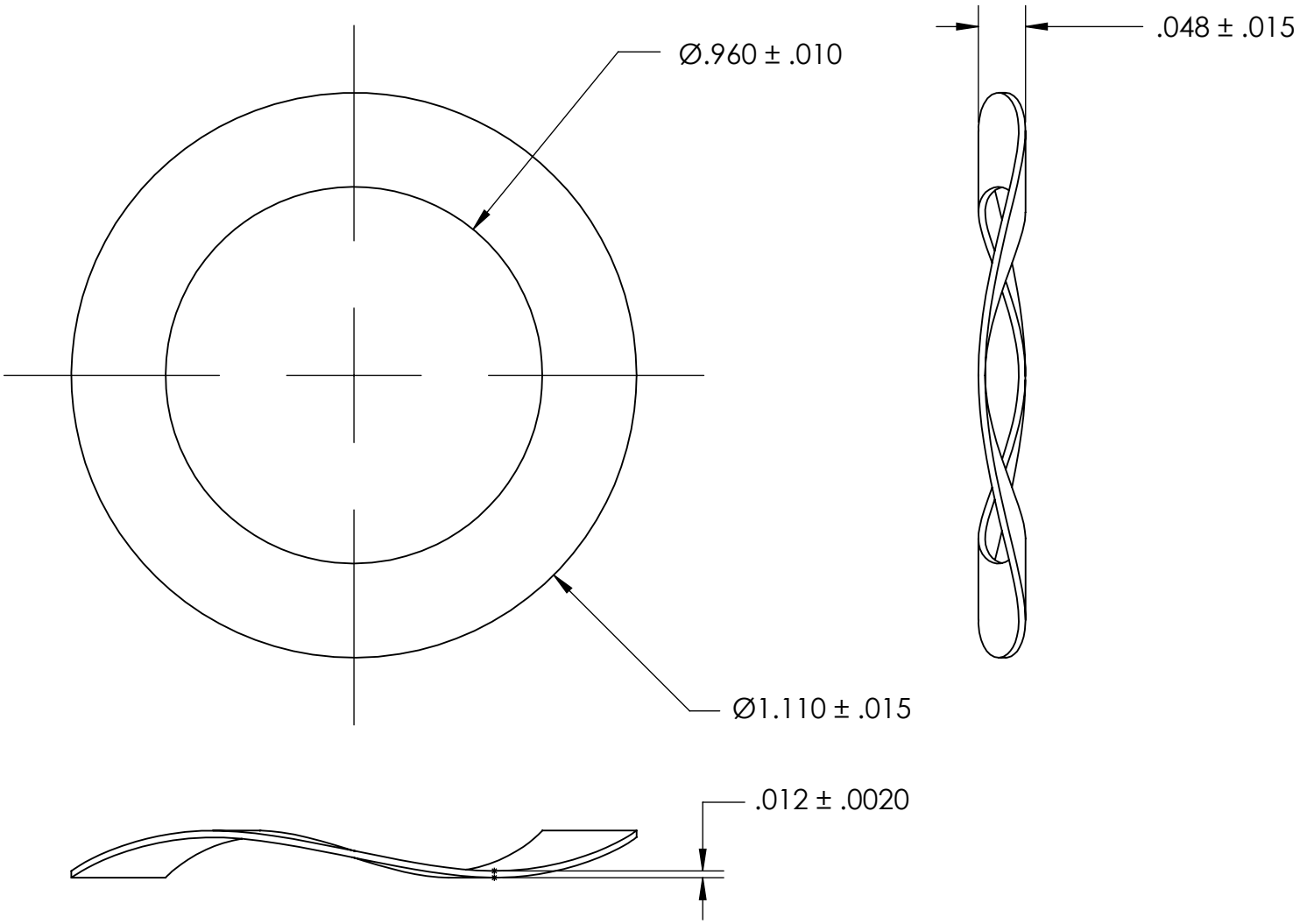

NOTES
1. BLACK OXIDE PER MIL-DTL-13924 CLASS 1, LIGHT OIL, NO TEST REQUIRED; w/BAKE
2. HEAT TREAT: QUENCH & TEMPER 82.5-84.5 HR15N
3. NUMBER OF WAVES: 3
4. DIMENSIONS APPLY BEFORE PLATING

PROPRIETARY AND CONFIDENTIAL
THE INFORMATION CONTAINED IN THIS DRAWING IS THE SOLE PROPERTY OF SEASTROM MANUFACTURING. ANY REPRODUCTION IN PART OR AS A WHOLE WITHOUT THE WRITTEN PERMISSION OF SEASTROM MANUFACTURING IS PROHIBITED.

DIMENSIONS ARE IN INCHES
TOLERANCES:
FRACTIONAL ±1/32
ANGULAR: MACH ±1/2 Deg
TWO PLACE DECIMAL ±.01
THREE PLACE DECIMAL ±.005

MATERIAL
SPRING STEEL

FINISH
SEE NOTE 1

DRAWING IS NOT TO SCALE

	NAME	DATE
DRAWN		
CHECKED		
ENG APPR.		
MFG APPR.		
Q.A.		

COMMENTS:

SEASTROM MFG

WAVE SPRING WASHER

SIZE A | DWG. NO. 5806-42-2-BO | REV. -

SHEET 1 OF 1