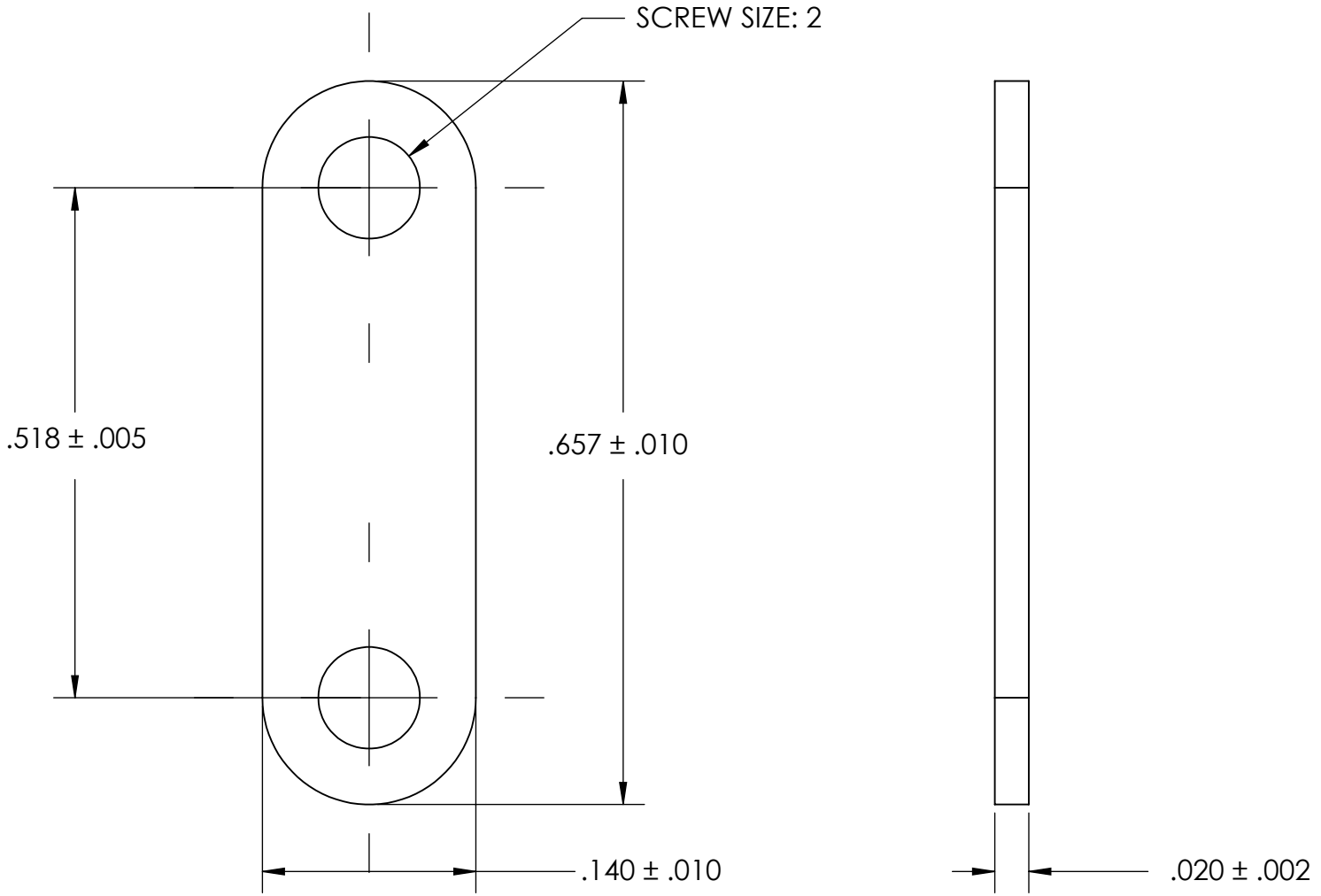

NOTES
1. TIN PLATE PER ASTM B545 CLASS B

2. STYLE: 1

3. DIMENSIONS APPLY PRIOR TO PLATING.

PROPRIETARY AND CONFIDENTIAL

THE INFORMATION CONTAINED IN THIS DRAWING IS THE SOLE PROPERTY OF SEASTROM MANUFACTURING. ANY REPRODUCTION IN PART OR AS A WHOLE WITHOUT THE WRITTEN PERMISSION OF SEASTROM MANUFACTURING IS PROHIBITED.

DIMENSIONS ARE IN INCHES
TOLERANCES:
FRACTIONAL ±1/32
ANGULAR: MACH ±1/2 Deg
TWO PLACE DECIMAL ±.01
THREE PLACE DECIMAL ±.005

MATERIAL
COPPER

FINISH
SEE NOTE 1

DRAWING IS NOT TO SCALE

	NAME	DATE
DRAWN		
CHECKED		
ENG APPR.		
MFG APPR.		
Q.A.		

COMMENTS:

SEASTROM MFG

JUMPER

SIZE	DWG. NO.	REV.
A	5006-3C-T1	-

SHEET 1 OF 1