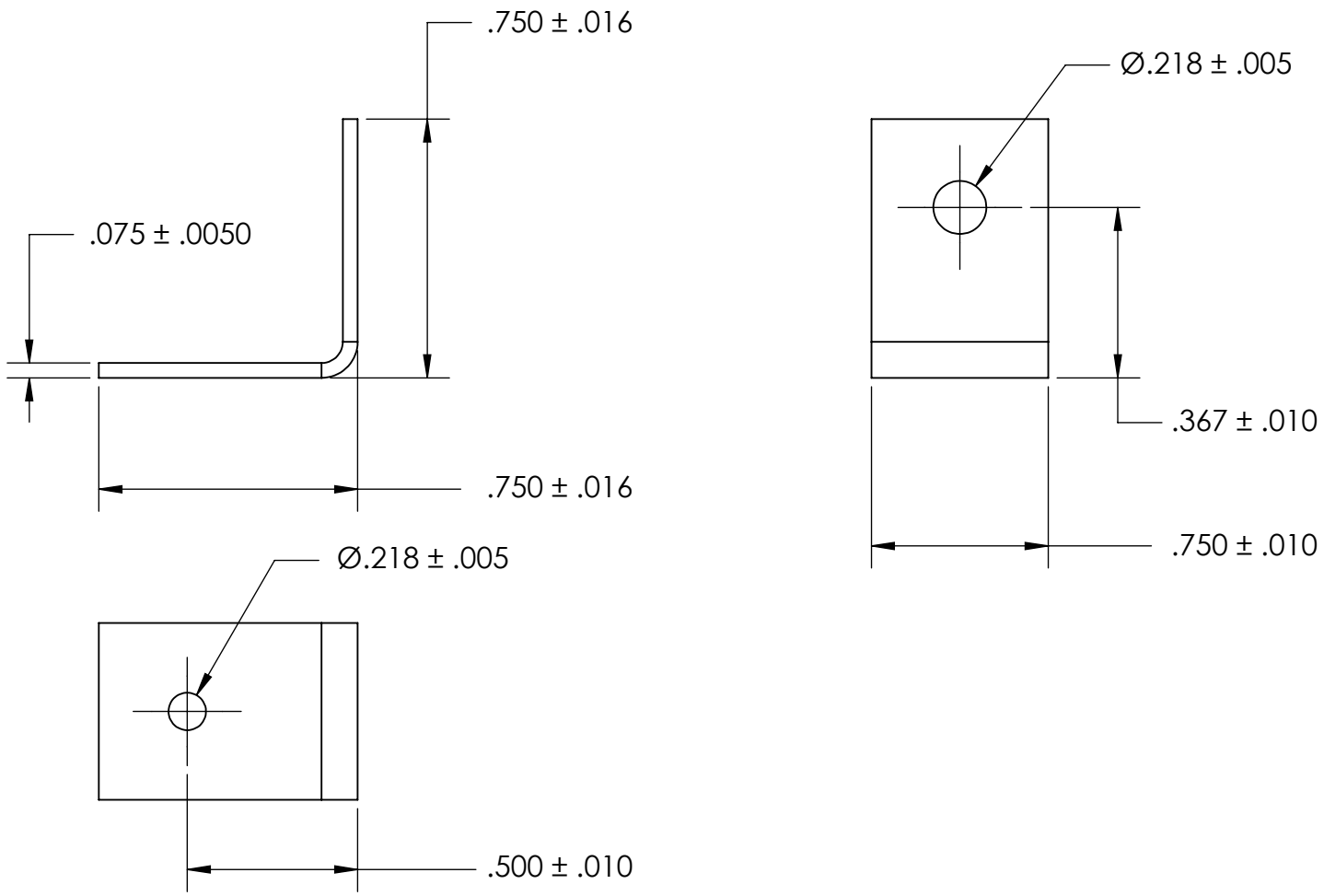

NOTES
1. NONE

2. STYLE: 1

3. SCREW SIZE: 12 / M5

PROPRIETARY AND CONFIDENTIAL
THE INFORMATION CONTAINED IN THIS DRAWING IS THE SOLE PROPERTY OF SEASTROM MANUFACTURING. ANY REPRODUCTION IN PART OR AS A WHOLE WITHOUT THE WRITTEN PERMISSION OF SEASTROM MANUFACTURING IS PROHIBITED.

DIMENSIONS ARE IN INCHES
TOLERANCES:
FRACTIONAL ± 1/32
ANGULAR: MACH ± 1/2 Deg
TWO PLACE DECIMAL ± .01
THREE PLACE DECIMAL ± .005

MATERIAL
COLD ROLLED STEEL

FINISH
SEE NOTE 1

DRAWING IS NOT TO SCALE

	NAME	DATE
DRAWN		
CHECKED		
ENG APPR.		
MFG APPR.		
Q.A.		

COMMENTS:

SEASTROM MFG

ANGLE BRACKET

SIZE	DWG. NO.	REV.
A	4928-9	-

SHEET 1 OF 1